Syrlinks

Space | Defense | Safety | Time Frequency

SGTM16HP-UW

High Performance Timing Module for underwater systems

PRODUCT OVERVIEW

SGTM16HP-UW is the best trade-off between low aging drift and low power consumption within Syrlinks' SGTM portfolio. It uses the EWOS16HP OCXO at 16.384 MHz. The Timing module can be used as a PPS time keeper in all highly battery-constraint underwater systems needing a precision OCXO-based clock. The module will automatically adjust the OCXO frequency and phase to an external 1PPS reference signal given by a GNSS receiver. Once locked and disciplined, it can be deployed in GNSS-denied environment (underwater) and the module will keep a precise synchronization in hold-over mode for the embedded electronics (typical aging ±0.2 ppb/day). SGTM16HP is ideal to reduce battery size and extend underwater mission time. Its thermal sensitivity is typically ±15 ppb but can be improved down to typically ±1ppb thanks to a specific firmware calibration on demand (-CT model).

KEY FEATURES

- 16.384 MHz HCMOS output
- Thermal sensitivity: ±15 ppb or ±1 ppb (typ.)
- 115 mW at 25°C (typ.)
- ±0.2 ppb/day after 30 days (typ.)
- Pin-to-pin compatible replacement of Chip Scale Atomic Clock

DIMENSIONS & PIN-OUT

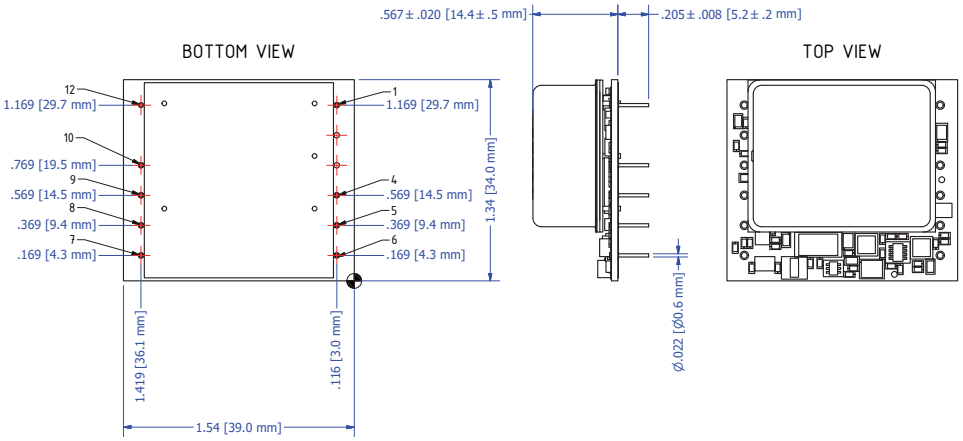

PIN	FUNCTION
1	Vtune
4	Tune Enable
5	TX
6	RX
7	Vcc
8	GND
9	1PPS IN
10	1PPS OUT
12	RF OUT

ORDERING INFORMATION

SGTM 16HP - 3V3 - A - H4 - xx

FREQUENCY (MHz)

CODE	SPECIFICATION
8	8.192
10	10
16	**16.384**
20	20
32	32.768
40	40

RESONATOR TYPE

CODE	SPECIFICATION
HP	**SC-cut**
Blank	AT-cut

POWER SUPPLY

CODE	SPECIFICATION
3V3	**3V3**
5V0	5V0

TEMPERATURE RANGE

CODE	SPECIFICATION
A	**-10°C/+45°C**
B	-30°C/+70°C
C	-40°C/+85°C

OUTPUT

CODE	SPECIFICATION
H	**HCMOS**
S	Sine 50Ω
C	Clipped Sine 10kΩ

PACKAGE

CODE	SPECIFICATION
1	DIL14 Low
2	DIL14 High
3	Europack Low
4	**Europack High**

SW OPTIONS

CODE	SPECIFICATION
CO	**Compensation OFF**
CT	**Thermal Compensation**

SGTM16HP-UW V1.1 | Updated on 29th October 2021 | This document is the property of Syrlinks. Information contained is not contractual & is susceptible to modifications without advance notice.

ELECTRICAL CHARACTERISTICS

PARAMETERS	Unit	Min	Typ.	Max	Note	Comments
Output Frequency	MHz		16.384		1	
Temperature Range						
• Operating	°C	-10		+45		Stay functional at +50°C but stability may not be met
• Storage	°C	-55		+95		
Supply Voltage	V	3.15	3.3	3.45		±5% or 5V on request
Supply Current						
• Warm-up	mA			230	3	During 10s max @ 25°C / 40s max @ 5°C
• Steady state / -10°C	mA		82	88.5	1	
• Steady state / +5°C	mA		68	73.5	1	
• Steady state / +25°C	mA		45	48	1	
• Steady state / +45°C	mA		28	34	1	
Frequency Stability						
• Initial frequency accuracy	ppm		±0.05	±0.1	1	+25°C referred to nominal frequency
• Vs operating temperature range	ppb		±15	±30	1	Order code -CO (without thermal calibration firmware)
			±1	±3		Order code -CT (with thermal calibration firmware)
• Vs supply voltage variation	ppb			±2	3	3.3V ± 5%
• Vs load	ppb			±2	3	10kΩ // 15 pF load ±10%
• Short-term (τ=0.1s)	10^{-11}		0.5	1	3	Allan deviation @ 16.384 MHz
(τ=1s)	10^{-11}		1	5	3	
• Aging						
Per day	ppb		±0.2	±0.5	3	After 30 days
First year	ppb			±50	3	
After 10 years	ppb			±300	3	
• Acceleration sensitivity	ppb/G			±1	3	Worst direction
• Warm-Up Time	sec			30	3	to ± 1 ppm of final frequency (1 hour) at 25°C
	min			3	3	to ± 100 ppb of final frequency (1 hour) at 25°C
• Retrace	ppb			±10	3	24h work after 24 off
HCMOS RF Output Level						
• Load	pF		15		3	1 MΩ
• Signal Level - Vh	V	2.4			3	
• Signal Level - Vl	V			0.4	3	
• Rise \ Fall Time	ns			8	3	10% - 80%
• Duty Cycle	%	45		55	3	
1 PPS Output Parameters						
• Load	pF		10		3	1 MΩ
• Rise \ Fall Time	ns			8	3	10% - 80%
• Signal Level - Vh	V	2.4			3	
• Signal Level - Vl	V			0.4	3	
• Level	V	0		Vcc	3	
1 PPS Input Parameters						
• Format			Rising edge			
• Load	MΩ		1		3	
• Logic low level	V	< 0.4			3	
• Logic high level	V			2.4 to Vcc	3	
Serial Communications						
• Protocol			RS-232			
• Format	V	0		Vcc		CMOS
• Baud Rate			57600		3	
1 PPS accuracy 1σ	ns		±32			
Hold over stability	µs	±10		±60		over 24h (at +25°C)
Weight	grams		20			

Notes

1. Parameter inspected at 100% | 2. Parameter inspected by sampling | 3. Parameter guaranteed by design and characterization

SGTM16HP-UW V1.1 | Updated on 29th Ocotber 2021 | This document is the property of Syrlinks. Information contained is not contractual & is susceptible to modifications without advance notice.

ENVIRONMENTAL CONDITIONS	
Soldering instructions	Hand soldering only, with recommended pins soldering temperature : 235°C ±5°C, t=10s ±0.5s (260°C max for 5s max) Reflow soldering and other soldering methods are prohibited
Mounting instructions	Pin receptacles mounted into PCB can be used. Reference example : 0338-0-15-XX-15-XX-10-0
PCB cleaning/washing	Not washable

OCXO HERMETICITY
Metallic housing hermetically sealed
Fine Leaks and Gross Leaks tests performed 100%

SGTM16HP-UW V1.1 | Updated on 29th October 2021 | This document is the property of Syrlinks. Information contained is not contractual & is susceptible to modifications without advance notice.